This document is the absolute property of DOMAX Sp. z o.o. This document must not be copied without the written permission of DOMAX Sp. z o.o. The contents thereof must not be disclosed to a third party nor be used for any unauthorized purpose. Contravention will be prosecuted.

Revsion				
Rev.	Explanation	Data	Revised by	Approved by

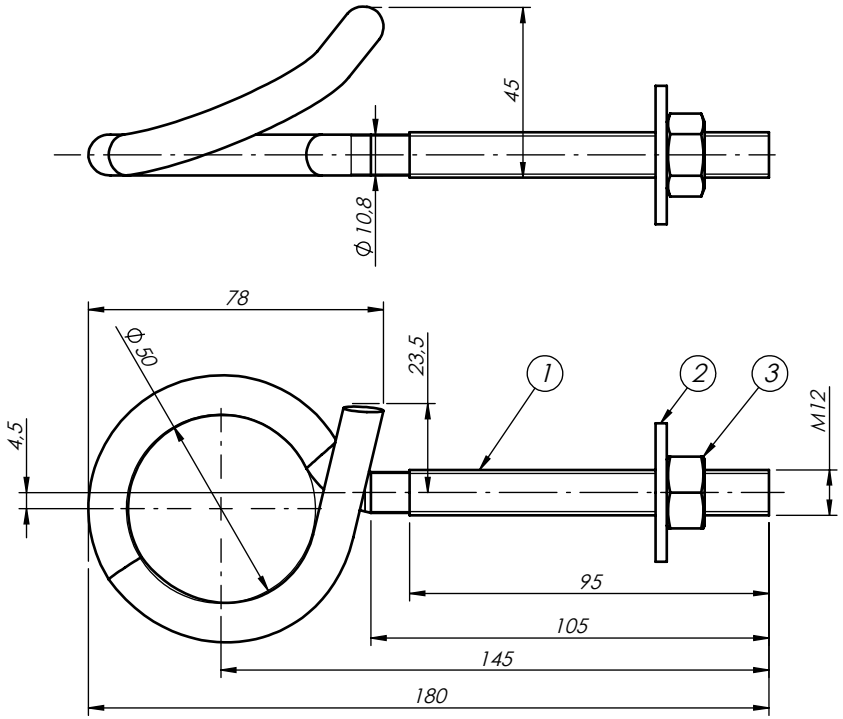

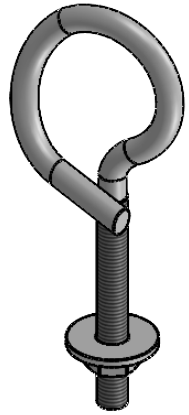

Note:
1. General tolerances EN 22768 mK.
2. Zinc galvanized EN ISO 1461.

Pos.	No.	Name	Description	Material	Weight
3	1	Nut	M12-5 DIN 934	S235	0,01
2	1	Washer	M12 DIN 9021	S235	0.02
1	1	Swing hook metric	MHW 12x180-S	S235	0.24

Design: D.Kozłowski	Checked: -	Approved: -	Note: 1.52 dm^2
Drawn: D.Kozłowski	Format: A4	Scale: 1:2	Material:	Weight: 283,2 g
Index:	Date: 12.08.2021	Swing hook metric M12	Sheet 1/1
domax DOMAX Sp. z o.o.		MHM 12x180	Rev 0